# Optional Equipment

IDROGRU CRANE

# KT250.25

Reclinable trelis jib 6.2 / 12 m

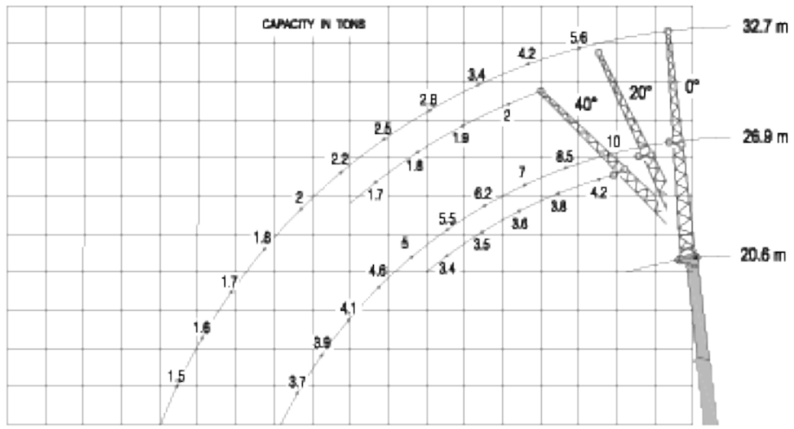


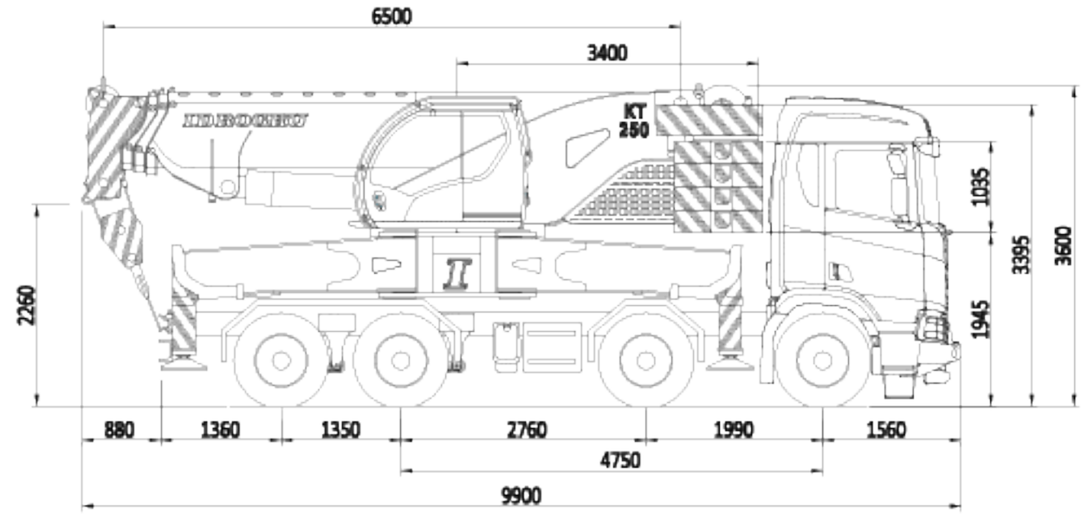


Divisible counterweight with automatic unloading

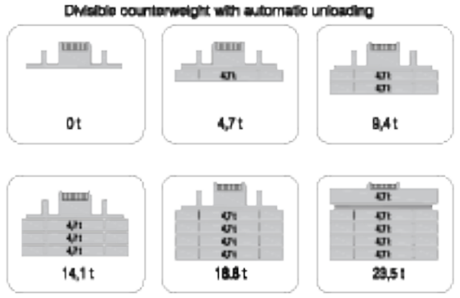


1,5 meters hook or pulley for reclinable boom head -60° -30° 0°

0,5 meters hook for reclinable boom head at -60° -30° 0°

Three position reclinable boom head

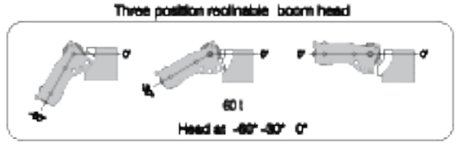


Hook blocks of various capacities

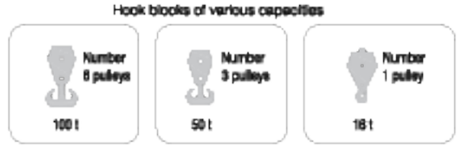


Primary winch

- rope d.20 - rope pull 8,35 t
- volume per revolution (cm3 ) 140 (max ) -70 (min)
- max line pull at 1st layer (m/min) 45 - 90
- max line pull at last layer (m/min) 64 - 129

3 meters trelis jib

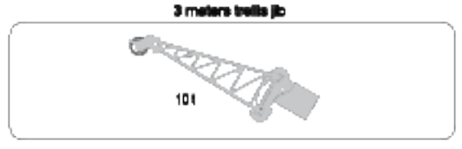


Double winch

- rope d.18 - rope pull 6,7 t
- rope d.14 - rope pull 4 t
- volume per revolution ( cm3 ) 63 140 (max ) - 93 (min)
- max line pull at 1st layer (m/min) 97 70,1 - 105,5
- max line pull at last layer (m/min) 141,9 99,9 - 150,4

3,7 meters lift spreader beams

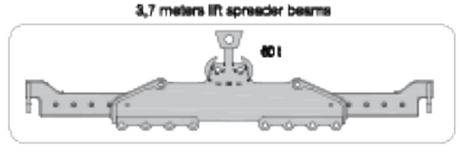


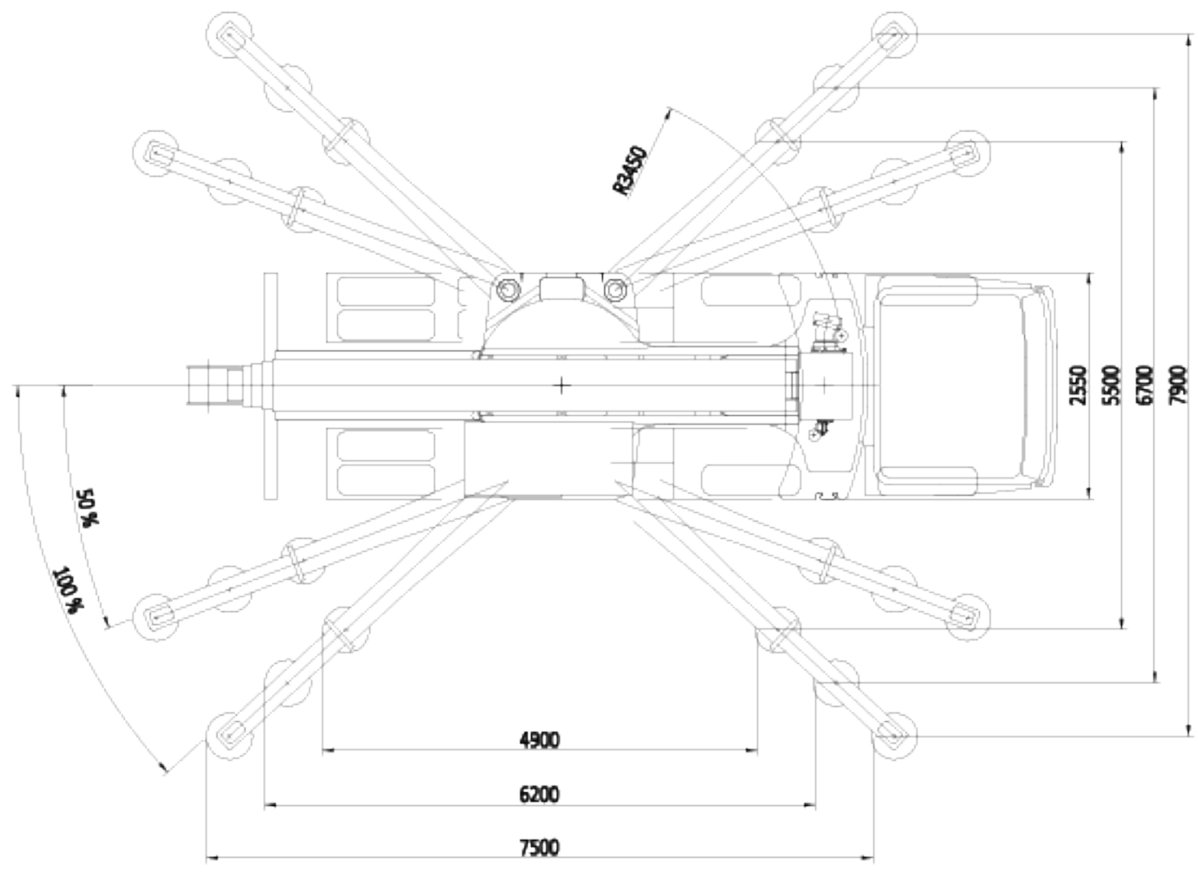


The lifting capacities in the structural area are based on DIN 15018 part 3 / FEM 5.004 / EN 13000.
The lifting capacities in the stability area are based on DIN 15019 part 2 / ISO 4305 / EN 13000

IDROGRU CRANE
Via Vecchione, 110/B, 41126 Modena, Italy
Tel. +39 059 923148 • info@idrogru.it
www.idrogru.it

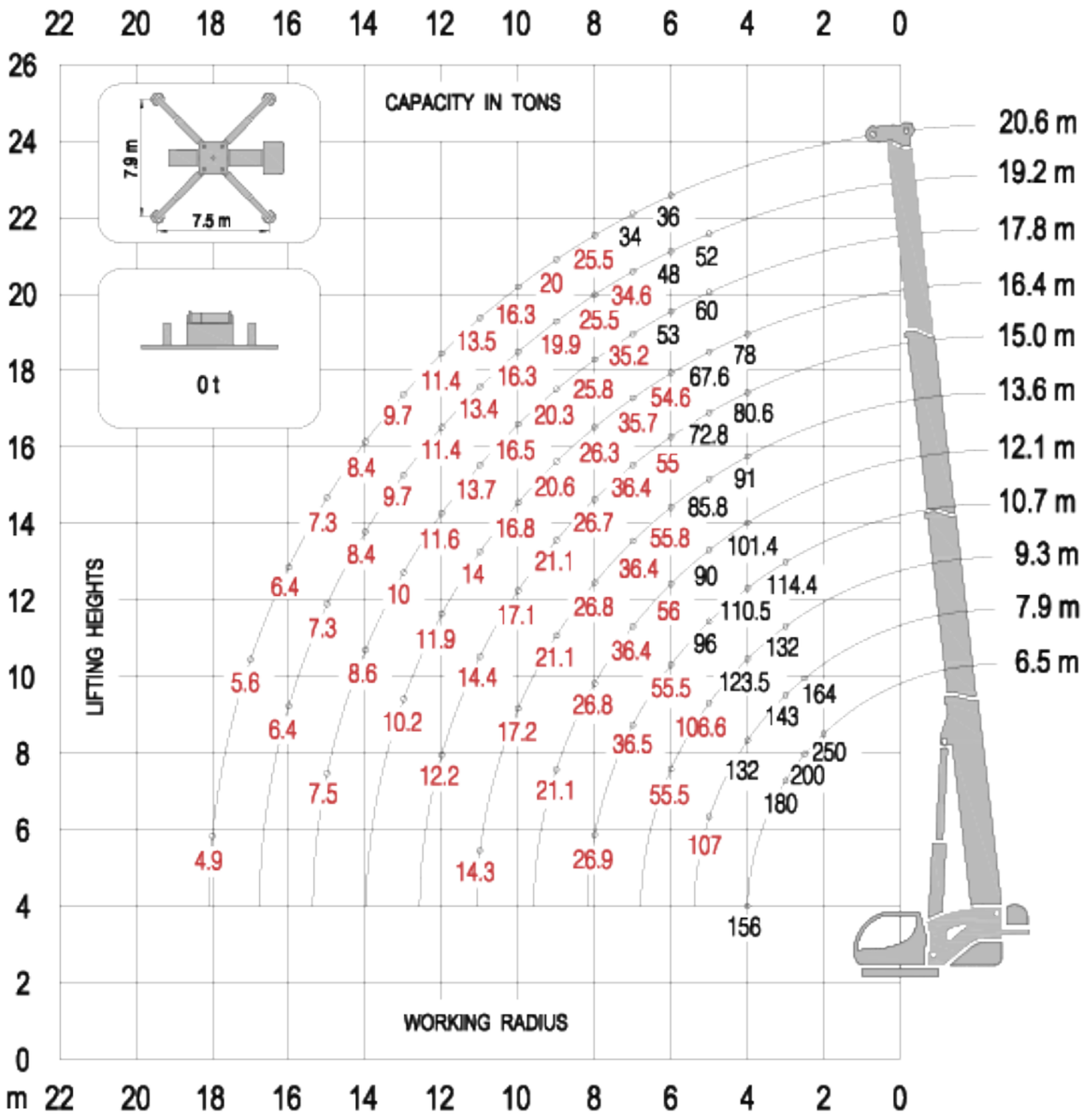
CAPACITY IN TONS
7.9 m
7.5 m
0 t
LIFTING HEIGHTS
WORKING RADIUS
20.6 m
19.2 m
17.8 m
16.4 m
15.0 m
13.6 m
12.1 m
10.7 m
9.3 m
7.9 m
6.5 m

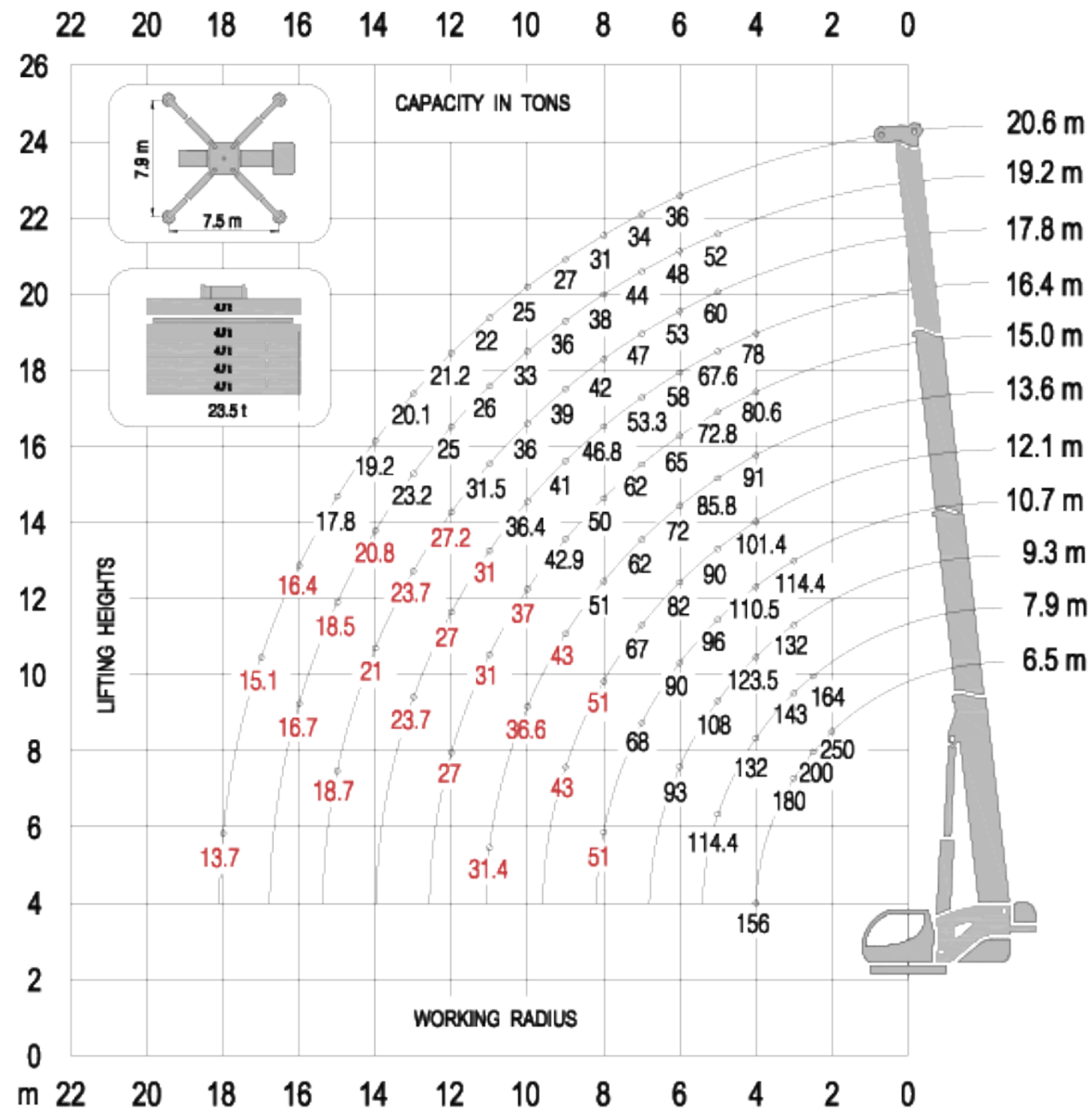
CAPACITY IN TONS
7.9 m
7.5 m
23.5 t
LIFTING HEIGHTS
WORKING RADIUS
20.6 m
19.2 m
17.8 m
16.4 m
15.0 m
13.6 m
12.1 m
10.7 m
9.3 m
7.9 m
6.5 m